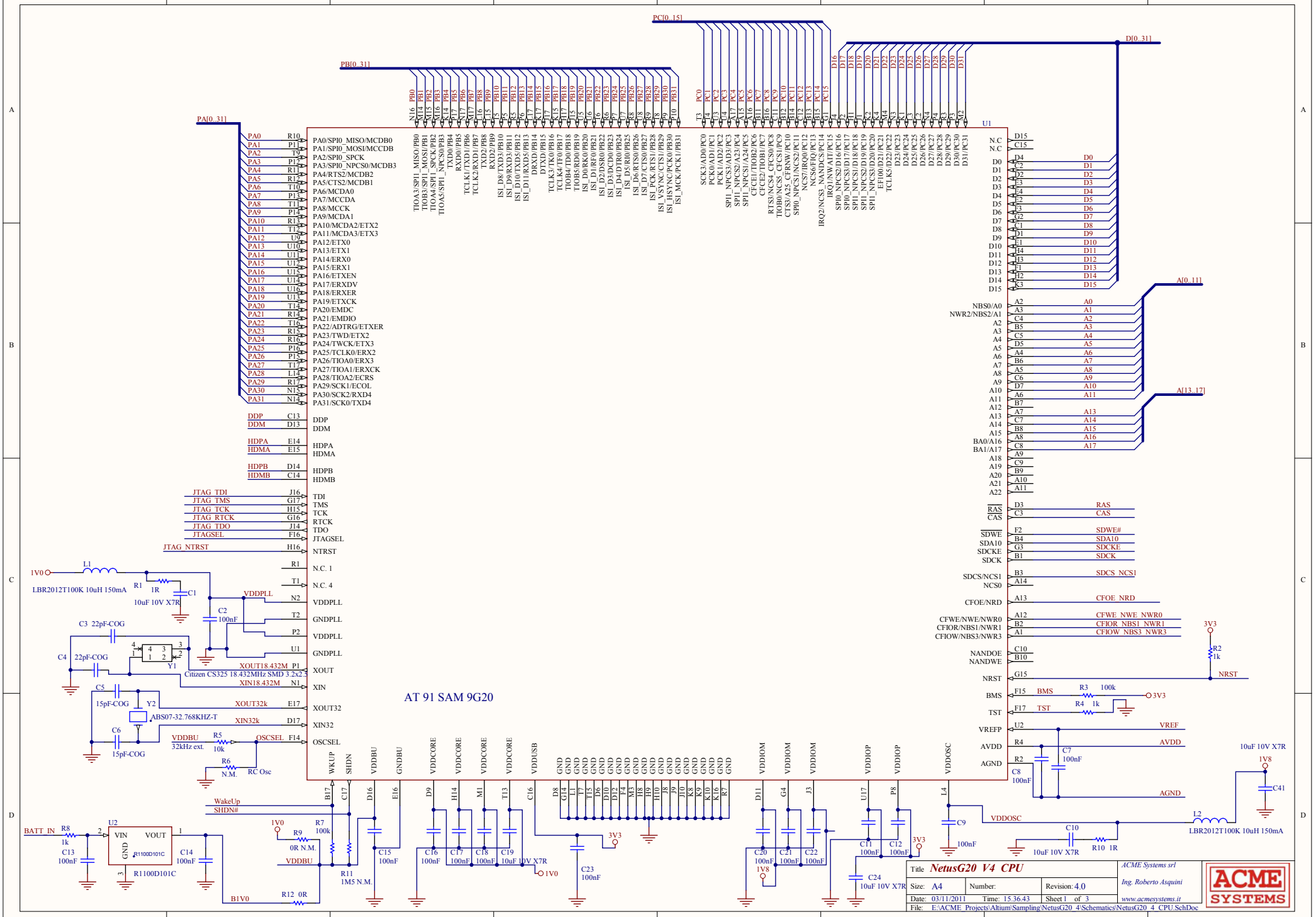
AT 91 SAM 9G20
U1
PA[0..31]
PB[0..31]
PC[0..15]
D[0..31]
A[0..11]
A[13..17]
U2
R1100D101C
LBR2012T100K 10uH 150mA
Citizen CS325 18.432MHz SMD 3.2x2.5
ABS07-32.768KHZ-T
RC Osc
BATT_IN
WakeUp
SHDN#
VDDBU
VDDPLL
VDDOSC
AGND
NRST
3V3
1V0
1V8
B1V0
Title NetusG20 V4 CPU
Size: A4
Number:
Revision: 4.0
Date: 03/11/2011
Time: 15.36.43
Sheet 1 of 3
File: E:\ACME_Projects\Altium\Sampling\NetusG20_4\Schematics\NetusG20_4_CPU.SchDoc
ACME Systems srl
Ing. Roberto Asquini
www.acmesystems.it
ACME SYSTEMS

SDRAM

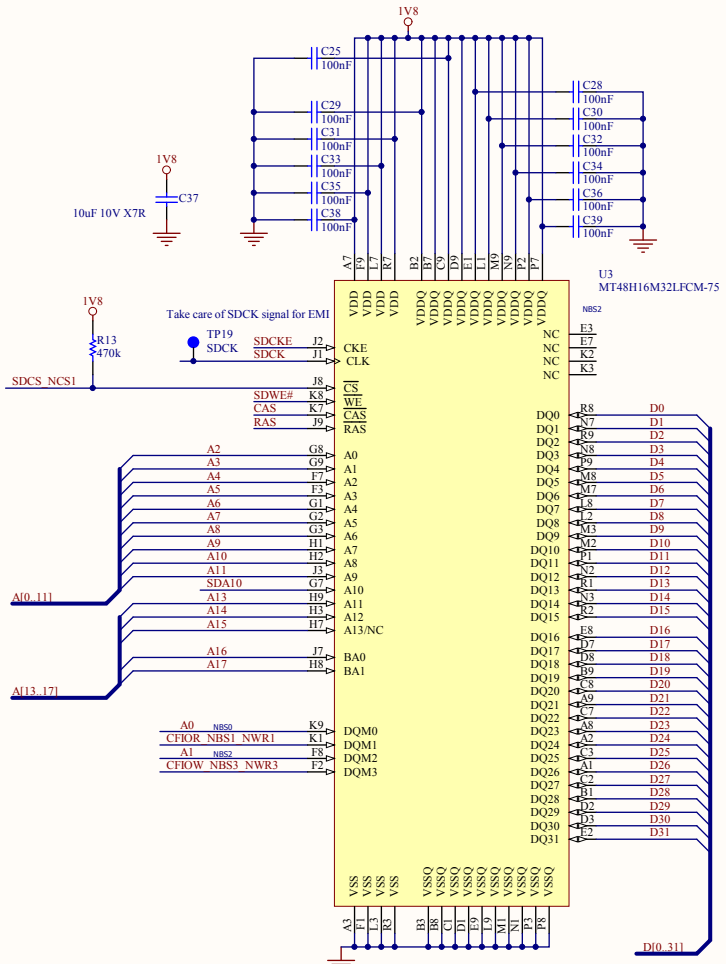

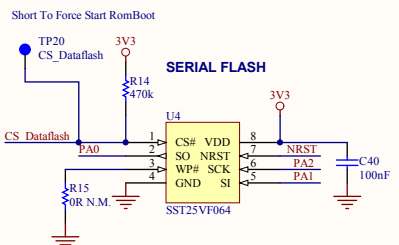

PC11 R16 CS_Dataflash
10k

To be mounted to have Dataflash_CS1

PA3 R17 CS_Dataflash
10k N.M.

To be mounted to have Dataflash_CS0

PA3 R18 PA3OUT
0R

To be mounted to have Dataflash_CS1 and 4wireSD

Title	*NetusG20 V4 Memory*		*ACME Systems srl*
Size: A4	Number:	Revision: 4.0	*Ing. Roberto Asquini*
Date: 03/11/2011	Time: 15.36.43	Sheet 2 of 3	*www.acmesystems.it*
File: E:\ACME_Projects\Altium\Sampling\NetusG20_4\Schematics\NetusG20_4_Memory.SchDoc			

ACME SYSTEMS

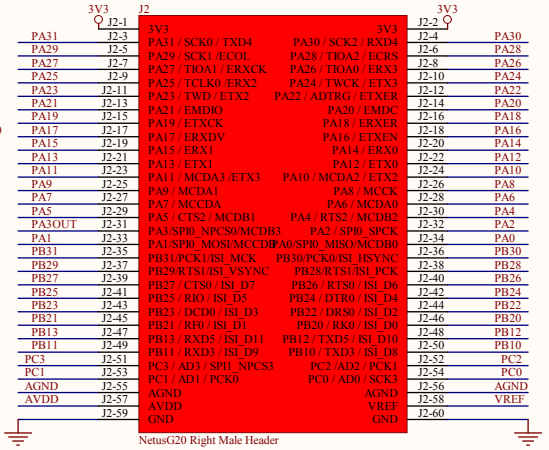

NewFid 1 NewFid 2

Title	*NetusG20 V4 Headers*		*ACME Systems srl*
Size: A4	Number:	Revision: 4.0	*Ing. Roberto Asquini*
Date: 03/11/2011	Time: 15.36.43	Sheet 3 of 3	*www.acmesystems.it*
File: E:\ACME_Projects\Altium\Sampling\NetusG20_4\Schematics\NetusG20_4_Headers.SchDoc			

ACME SYSTEMS