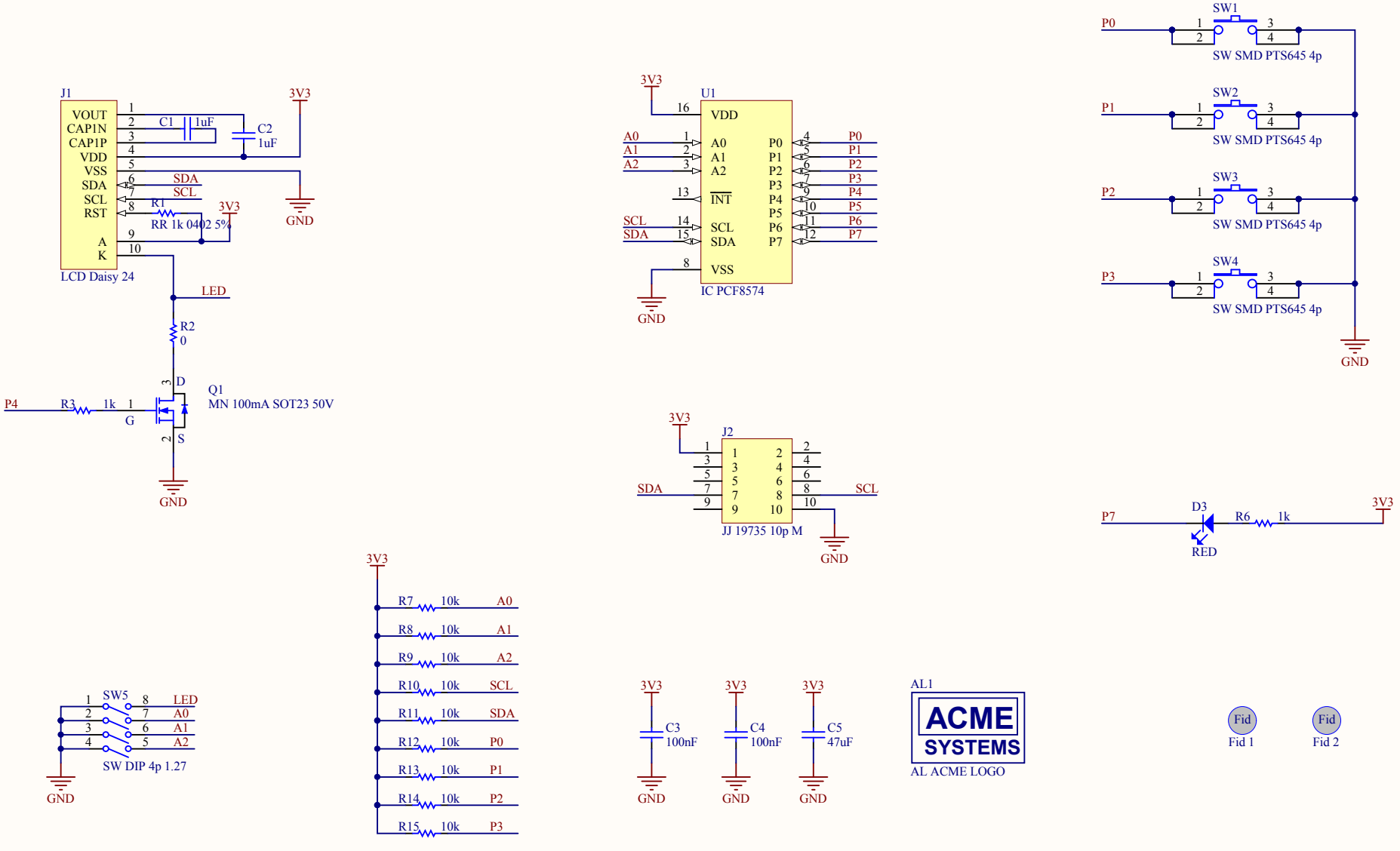

Title	*Daisy 24 LCD*		*ACME Systems srl*
Size: A4	Number:	Revision: 1.1	
Date: 06/12/2012	Time: 17:52:11	Sheet 1 of 1	*www.acmesystems.it*
File: C:\ACME_Projects\Altium\altium-common\Daisy 24\Daisy 24.SchDoc			