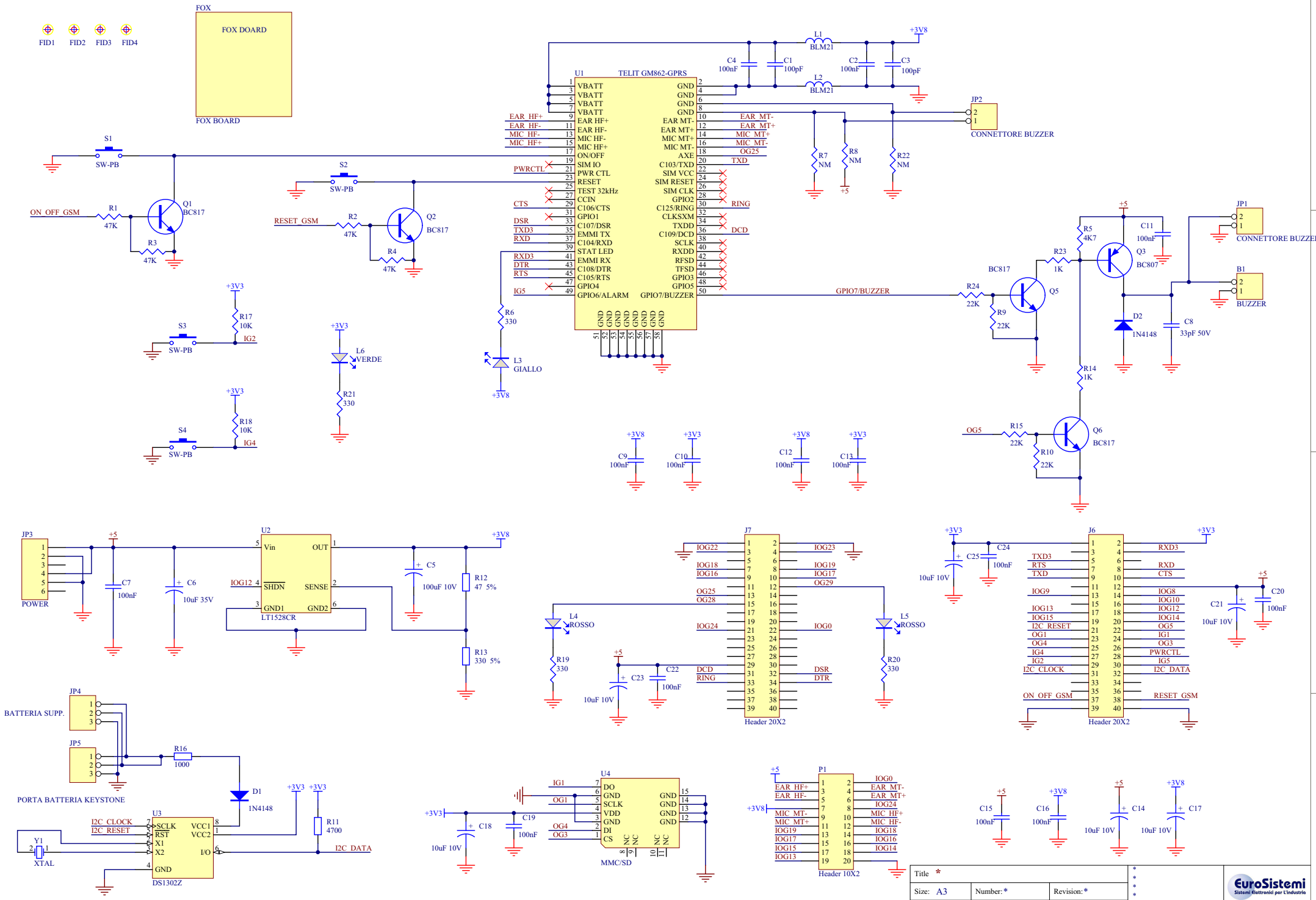
FID1
FID2
FID3
FID4
FOX
FOX DOARD
FOX BOARD
U1
TELIT GM862-GPRS
VBATT
EAR HF+
EAR HF-
MIC HF-
MIC HF+
ON/OFF
SIM IO
PWR CTL
RESET
TEST 32kHz
CCIN
C106/CTS
GPIO1
C107/DSR
EMMI TX
C104/RXD
STAT LED
EMMI RX
C108/DTR
C105/RTS
GPIO4
GPIO6/ALARM
GND
EAR MT-
EAR MT+
MIC MT+
MIC MT-
AXE
C103/TXD
SIM VCC
SIM RESET
SIM CLK
GPIO2
C125/RING
CLKSXM
TXDD
C109/DCD
SCLK
RXDD
RFSD
TFSD
GPIO3
GPIO5
GPIO7/BUZZER
PWRCTL
CTS
DSR
TXD3
RXD
RXD3
DTR
RTS
IG5
OG25
TXD
RING
DCD
L1
BLM21
L2
BLM21
+3V8
C4
100nF
C1
100pF
C2
100nF
C3
100pF
JP2
CONNETTORE BUZZER
R7
NM
R8
NM
R22
NM
+5
S1
SW-PB
S2
SW-PB
ON_OFF_GSM
R1
47K
Q1
BC817
R3
47K
RESET_GSM
R2
47K
Q2
BC817
R4
47K
+3V3
R17
10K
IG2
S3
SW-PB
R18
10K
IG4
S4
SW-PB
L6
VERDE
R21
330
R6
330
L3
GIALLO
+3V8
GPIO7/BUZZER
R24
22K
R9
22K
BC817
Q5
R5
4K7
R23
1K
Q3
BC807
C11
100nF
JP1
CONNETTORE BUZZER
B1
BUZZER
D2
1N4148
C8
33pF 50V
R14
1K
OG5
R15
22K
R10
22K
Q6
BC817
C9
100nF
C10
100nF
C12
100nF
C13
100nF
JP3
POWER
C7
100nF
C6
10uF 35V
U2
LT1528CR
Vin
OUT
SHDN
SENSE
GND1
GND2
IOG12
C5
100uF 10V
R12
47 5%
R13
330 5%
J7
Header 20X2
IOG22
IOG23
IOG18
IOG19
IOG16
IOG17
OG29
OG25
OG28
IOG24
IOG0
DCD
RING
DSR
DTR
L4
ROSSO
R19
330
L5
ROSSO
R20
330
C23
10uF 10V
C22
100nF
J6
Header 20X2
C24
100nF
C25
10uF 10V
TXD3
RTS
TXD
IOG9
IOG13
IOG15
I2C_RESET
OG1
OG4
IG4
IG2
I2C_CLOCK
ON_OFF_GSM
RXD3
RXD
CTS
IOG8
IOG10
IOG12
IOG14
OG5
IG1
OG3
PWRCTL
IG5
I2C_DATA
RESET_GSM
C20
100nF
C21
10uF 10V
JP4
BATTERIA SUPP.
JP5
PORTA BATTERIA KEYSTONE
R16
1000
D1
1N4148
U3
DS1302Z
SCLK
RST
X1
X2
GND
VCC1
VCC2
I/O
I2C_CLOCK
I2C_RESET
Y1
XTAL
R11
4700
I2C_DATA
U4
MMC/SD
DO
GND
SCLK
VDD
GND
DI
CS
IG1
OG1
OG4
OG3
C18
10uF 10V
C19
100nF
P1
Header 10X2
EAR_HF+
EAR_HF-
MIC_MT-
MIC_MT+
IOG19
IOG17
IOG15
IOG13
IOG0
EAR_MT-
EAR_MT+
IOG24
MIC_HF+
MIC_HF-
IOG18
IOG16
IOG14
C15
100nF
C16
100nF
C14
10uF 10V
C17
10uF 10V
Title *
Size: A3
Number: *
Revision: *
Date: 07/07/2006
Time: 16.56.13
Sheet * of *
File: Y:\PROGETTI\ACME SYSTEMS\FOXGM\SCHEMA FOXGM.SCHDOC
EuroSistemi
Sistemi Elettronici per L'Industria