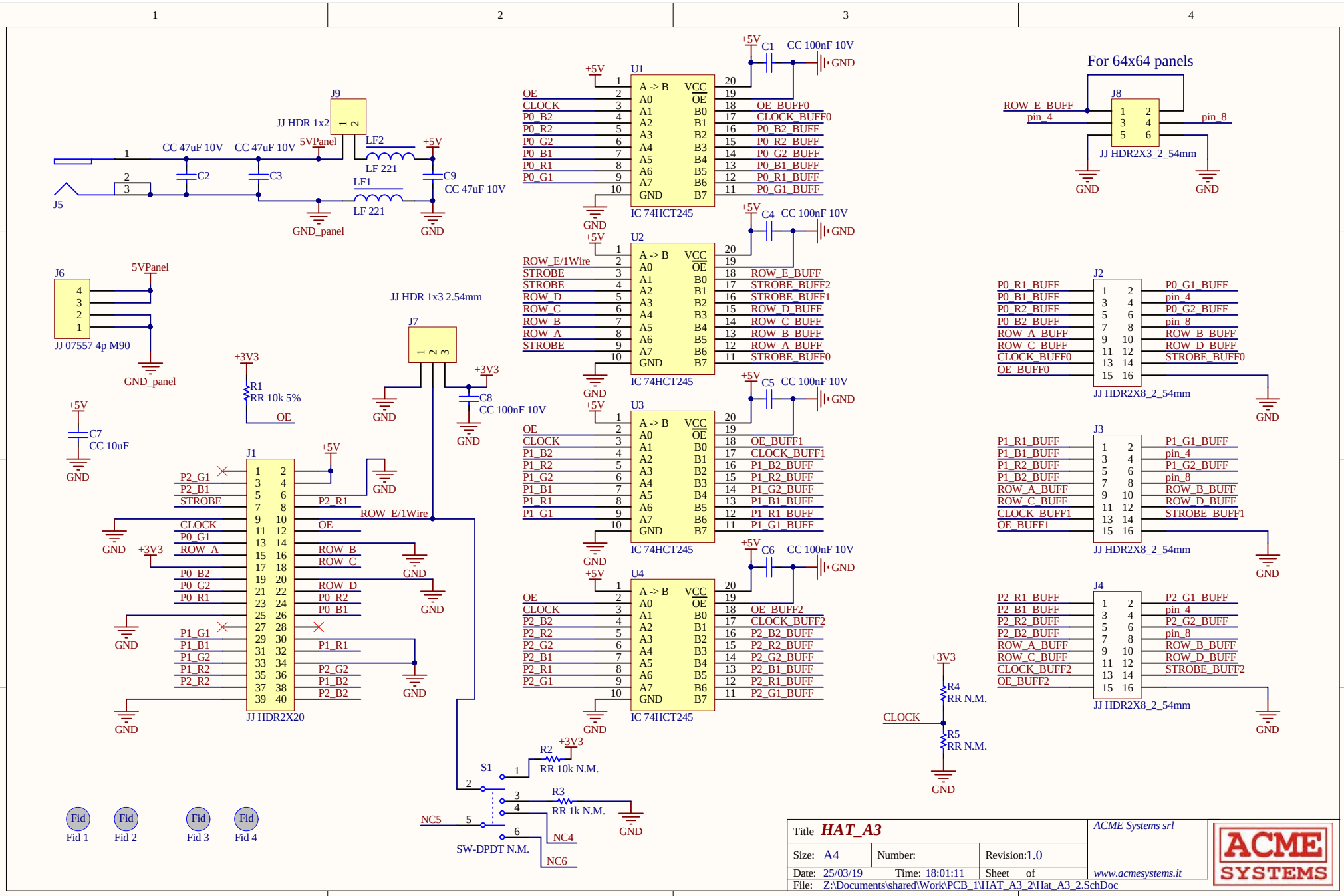
For 64x64 panels
J9
JJ HDR 1x2
5VPanel
CC 47uF 10V
CC 47uF 10V
C2
C3
LF2
LF 221
LF1
LF 221
C9
CC 47uF 10V
J5
GND_panel
GND
U1
IC 74HCT245
U2
IC 74HCT245
U3
IC 74HCT245
U4
IC 74HCT245
C1
C4
C5
C6
CC 100nF 10V
J8
JJ HDR2X3_2_54mm
J2
JJ HDR2X8_2_54mm
J3
JJ HDR2X8_2_54mm
J4
JJ HDR2X8_2_54mm
J6
JJ 07557 4p M90
JJ HDR 1x3 2.54mm
J7
C8
CC 100nF 10V
R1
RR 10k 5%
C7
CC 10uF
J1
JJ HDR2X20
R2
RR 10k N.M.
R3
RR 1k N.M.
S1
SW-DPDT N.M.
R4
RR N.M.
R5
RR N.M.
Fid 1
Fid 2
Fid 3
Fid 4
Title HAT_A3
Size: A4
Number:
Revision:1.0
Date: 25/03/19
Time: 18:01:11
Sheet of
File: Z:\Documents\shared\Work\PCB_1\HAT_A3_2\Hat_A3_2.SchDoc
ACME Systems srl
www.acmesystems.it
ACME SYSTEMS