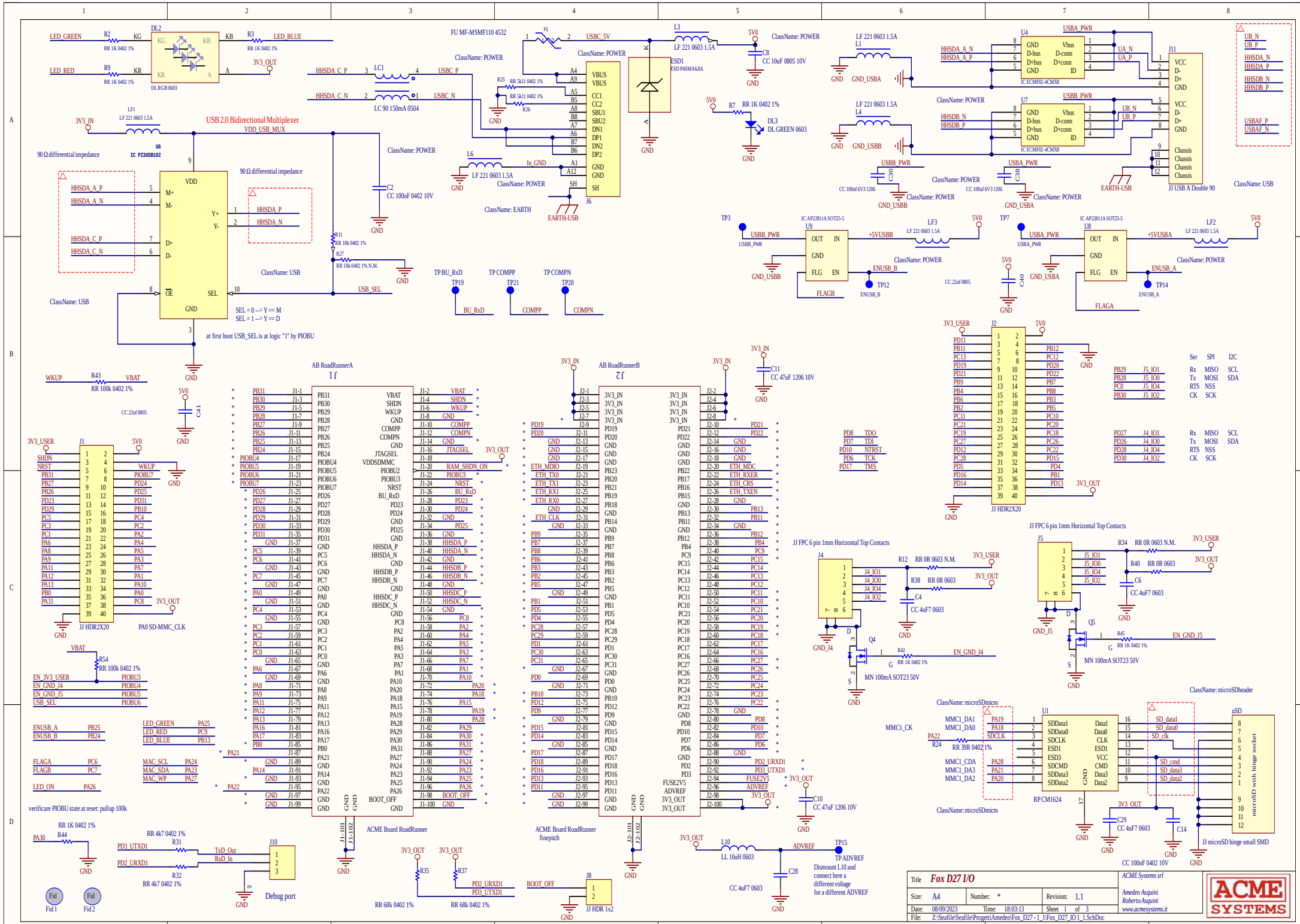
USB 2.0 Bidirectional Multiplexer
VDD_USB_MUX
U6
IC PI3USB102
90 Ω differential impedance
SEL = 0 --> Y == M
SEL = 1 --> Y == D
at first boot USB_SEL is at logic "1" by PIOBU
FU MF-MSMF110 4532
LC 90 150mA 0504
DL RGB 0603
DL GREEN 0603
ESD1
ESD P4SMA6.8A
IC ECMF02-4CMX8
JJ USB A Double 90
IC AP22811A SOT25-5
JJ HDR2X20
JJ FPC 6 pin 1mm Horizontal Top Contacts
MN 100mA SOT23 50V
AB RoadRunnerA
J1
AB RoadRunnerB
J2
ACME Board RoadRunner
ACME Board RoadRunner finepitch
Debug port
JJ HDR 1x2
microSD with hinge socket
JJ microSD hinge small SMD
Dismount L10 and connect here a different voltage for a different ADVREF
verificare PIOBU state at reset: pullup 100k
Title Fox D27 I/O
Size: A4
Number: *
Revision: 1.1
Date: 08/09/2023
Time: 18:03:13
Sheet 1 of 3
File: Z:\Seafile\Seafile\ProgettiAmedeo\Fox_D27 - 1_1\Fox_D27_IO 1_1.SchDoc
ACME Systems srl
Amedeo Asquini
Roberto Asquini
www.acmesystems.it
ACME SYSTEMS

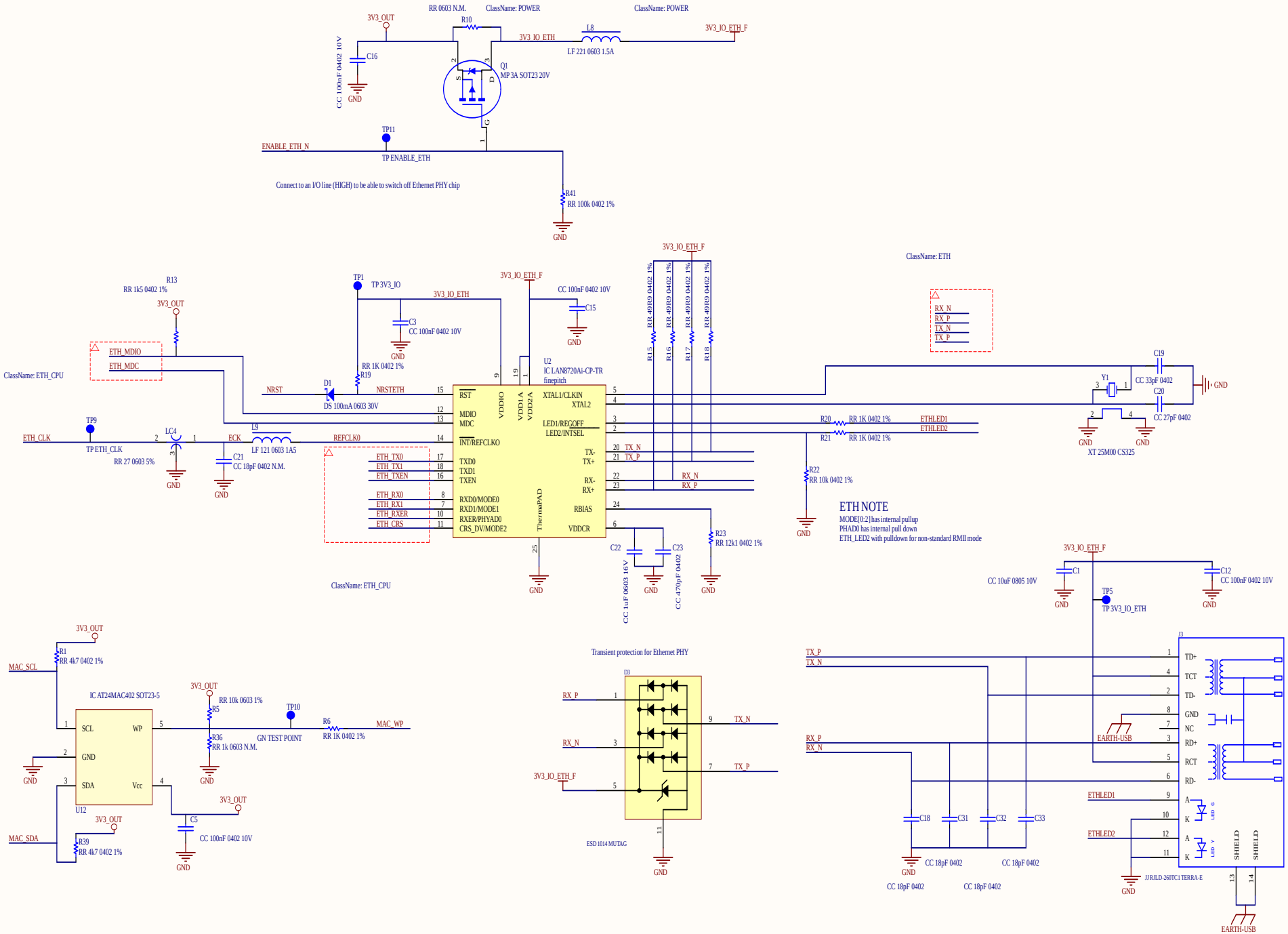

Title	*Fox D27 ETH*		
Size: A4	Number: *	Revision: 1.1	
Date: 08/09/2023	Time: 18:03:13	Sheet 2 of 3	
File: Z:\Seafile\Seafile\Progetti\Amedeo\Fox_D27 - 1_1\Fox_D27_ETH 1_1.SchDoc			

ACME Systems srl
Amedeo Asquini
Roberto Asquini
www.acmesystems.it

ACME SYSTEMS

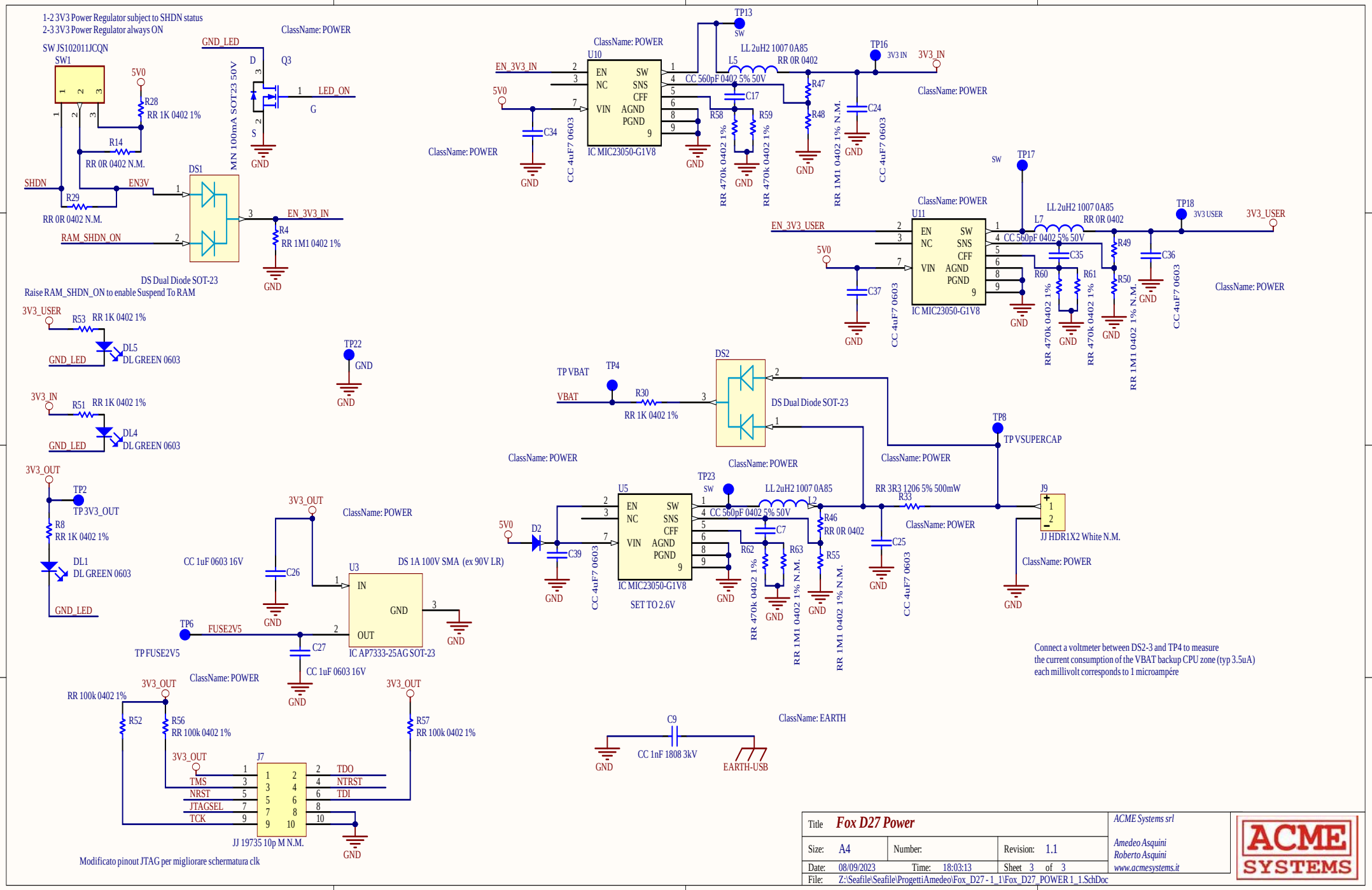

Title	*Fox D27 Power*		*ACME Systems srl*
Size: A4	Number:	Revision: 1.1	*Amedeo Asquini*
Date: 08/09/2023	Time: 18:03:13	Sheet 3 of 3	*Roberto Asquini*
File: Z:\Seafile\Seafile\ProgettiAmedeo\Fox_D27 - 1_1\Fox_D27_POWER 1_1.SchDoc			*www.acmesystems.it*

ACME SYSTEMS